GET OPTIMIZED
optimum
CRUSH®

GET OPTIMIZED.

What does optimized mean to you?
Maximizing production uptime? Extending crusher life? Reducing operating costs and scheduled maintenance? Optimum Crush can help you achieve all of that, and more. As the world's leading supplier of custom-engineered mantles and bowl liners, we do what it takes to support your crushers – from providing replacement wear parts to strategic solutions and 24/7 technical support.

Innovative, mission-critical support, from top to bottom.

Engineering • Custom Castings • Parts • Technical Support • Training

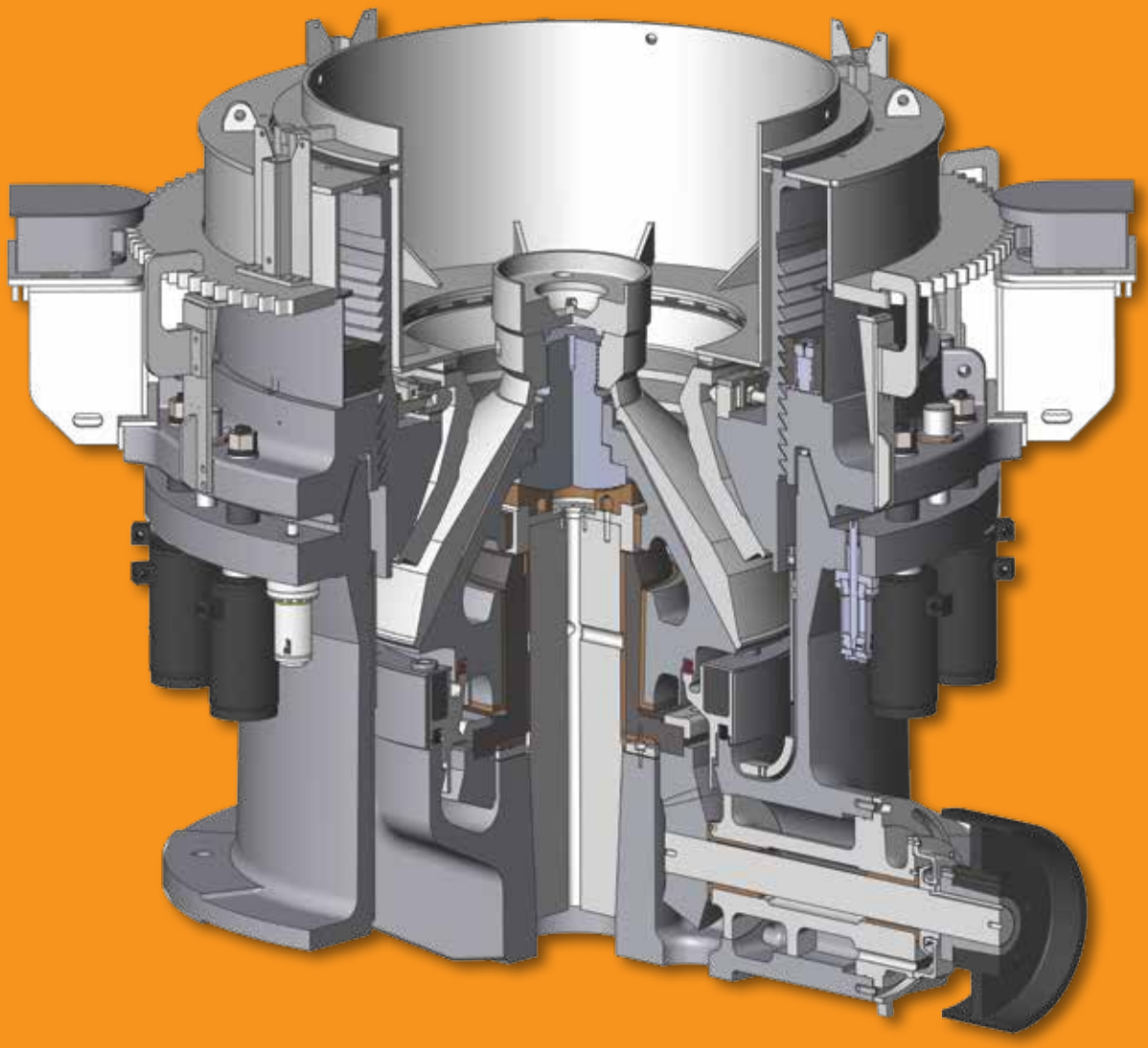

WHERE QUALITY AND EXPERIENCE MATTER MOST.

We keep cone crushers running.

We support cone crushers up to 2,500 hp. Not many people in this business can say that. Optimum Crush engineers have been deeply involved in designing cone crushers and consulting with OEM's. Our custom-built mantles and bowl liners have been proven on the ground to perform better than the original. Our team has been in the trenches with mine operators across North America, providing onsite troubleshooting and round-the-clock technical support. And because of our huge knowledge base, Optimum Crush has developed patented replacement parts that will help your equipment run better and safer.

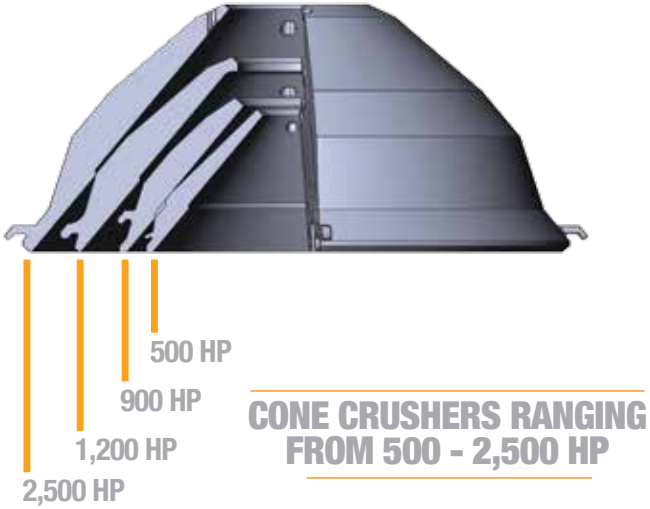

In the toughest places to cut costs, we make it look easy.

You need your crushing circuits to run as efficiently as possible, with the least amount of downtime. While cone crushers are built to handle the loads, mining environments eventually take their toll. Often sooner than later. By working with manufacturers and foundries, not to mention the experience we bring to your operation, Optimum Crush will work with you to develop strategies that maximize production and reduce operating costs.

Community optimization.

Supporting the communities that our customers live and work in is just as critical as supporting your equipment. Our goal is to develop long-term relationships that are mutually beneficial. You'll find Optimum Crush sponsoring scholarship programs, youth sports, 4H clubs, local churches and other non-profit groups. We want to be part of your community.

50 ways and counting to optimize your crusher.

Nobody knows crushers better than we do. Optimum Crush engineers apply their knowledge and experience to the total machine. We find ways to improve overall performance by looking at the individual parts. Our engineered liner review and wear analysis focuses on increasing life and production with custom-designed liners. Our relationship with multiple foundries minimizes risk and ensures the best price with liners made to our quality requirements. Optimum Crush® Liners have led to as much as 50% increased life and/or 10% increased production. In nearly 100% of the tests conducted, they have met or exceeded the current product.

Other Optimum Crush engineered replacement parts include main frame liners, cylinders, feed plates, bushings and bearings. All are designed to increase life and improve strength. Our full range of direct replacements offers mines a second parts source and reduces lead times.

Plus, Optimum Crush offers high-performance, patented supporting equipment such as jackshaft assemblies, lube systems, hydraulic systems, air coolers and auto-grease systems.

Ask us how we can provide parts that solve your problems.

YOUR CRUSHER EXPERTS.

The Optimum Crush team has extensive experience working with cone crusher manufacturers designing and servicing equipment. Count on us to handle anything involved with cone crushers.
We can be onsite in a matter of hours to help with troubleshooting. We'll train your team on optimization.
And when there's no need for us to be there, we're available 24-hours a day via phone and email.

For more information on who we are and how we can partner with you to get optimized,
visit our website:

optimumcrush.com

optimum crush®

16211 W Lincoln Ave New Berlin, Wisconsin 53151 414.909.8800